Mario Grosso
Politecnico di Milano – DIIAR – Environmental section
P.zza Leonardo da Vinci 32, 20133 Milano – Italy.
Phone: +39-02-23996415 - Fax: +39-02-23996499 - E-mail: mario.grosso@polimi.it

Experimental assessment of N_2O emissions from waste incineration: the role of NO_x control technology

Mario Grosso, Lucia Rigamonti
Politecnico di Milano – DIIAR – Environmental section

EXECUTIVE SUMMARY

Nitrous oxide (N_2O) is a powerful greenhouse gas which is mainly released in the atmosphere from agricultural practices. Some minor emissions are reported also from municipal waste incineration, mainly as a function of the technology utilised for NO_x reduction. According to the 2000/76/EU Directive, currently N_2O is not subjected to emission limits at the stack, still the raising concerns on greenhouse gases emissions require detailed investigation of all sources of such compound.

The paper describes an experimental evaluation carried out in a state-of-the-art waste incineration plant which was recently upgraded in the flue gas treatment system. The improvements include the substitution of lime with sodium bicarbonate for acid gases abatement, new fabrics in the bag filter, and the replacement of the high-temperature urea-fed SNCR system for NO_x control with a low-temperature SCR process fed with ammonia. The temperature profile of the flue gas treating system was adapted accordingly, with higher temperature in the bag filter compared to the previous line.

A detailed analysis of the steady-state operation was carried out for the three lines, before and after the upgrading, with special attention to the nitrogen compounds in the flue gas (NO_x, NH_3, N_2O). Data were gathered from the automatic flue gas monitoring system of the plant, installed both at the stack and at the boiler exit.

The urea-fed SNCR system resulted in significant N_2O emissions, in the order of 20 mg/m_n^3, while its effectiveness in the abatement of NO_x was limited by the amount of ammonia slip at the stack. Among all the investigated parameters, N_2O production was mainly affected by the post-combustion temperature, with an optimal range between 1010 and 1050°C for the simultaneous minimisation of N_2O, NO_x and NH_3 release at the stack. Other parameters, such as the urea feeding rate, showed a very limited influence on the nitrous oxide production.

In the new configuration of the flue gas treatment line, impressive improvements in the emission of nitrogen compounds were observed, with N_2O concentration at the stack below 1 mg/m_n^3, NO_x below 50 mg/m_n^3 and NH_3 below 1 mg/m_n^3. The N_2O emission levels were so stable that it resulted almost impossible to find any correlation with other operational parameters. The possible role of the SCR system on the reduction of previously formed N_2O was excluded when analysing the "hybrid" operation of the plant (SNCR-like urea feeding in the post combustion chamber, with ammonia slip acting as the reducing agent in the SCR). In this configuration stack emissions of N_2O were equal to those registered with the old layout.

The analysis of the functioning of the new line was extended to other pollutants as well as to other operational aspects (consumption of reactants, production of residues, costs, overall greenhouse gases reduction). The picture shows a wide range of advantages, almost no drawbacks and an acceptable cost for the whole revamping operation.

INTRODUCTION

Nitrous oxide (N_2O) is a powerful greenhouse gas, with a Global Warming Potential (GWP100) of 298, which is mainly released in the atmosphere from agricultural practices. Its contribution to global warming is estimated between 4 and 6% of the total anthropogenic emissions. Due to human activities, the N_2O concentration in the atmosphere had a 13% increase since pre-industrial period, and it is now in the order of 0,33 ppmv.

Some minor emissions are reported also from municipal solid waste incineration, not as a typical pollutant released from combustion, but as a by-product of the adopted NO_x reduction technology. According to the 2000/76/EU Directive on waste incineration, currently N_2O is not subjected to emission limits at the stack, and the BAT Reference Document on waste incineration, despite some qualitative consideration on emission levels and favourable conditions for its formation, does not end up with clear and quantitative indications on BAT emission levels. The only conclusion is that N_2O emissions are higher when urea-operated SNCR systems are utilised, and that in general the post-combustion temperature might play a role in defining actual emission levels, with lower temperatures leading to higher emissions. N_2O then behaves as a pollutant that can be almost completely controlled by primary measures (i.e. those aimed at preventing its formation) rather than secondary ones (i.e. those aimed at its removal from the flues gas).

Experimental evaluations conducted on incineration plants located in Japan and Europe resulted in a range of N_2O concentration included between 1 and 16 mg/m^3 (Tanikawa et al., 1995; Olofson et al., 2002). The optimal post-combustion temperature window for minimising N_2O, NO_x and CO emissions is estimated between 950 and 1050°C; moreover Svoboda et al. (2006) have found a direct relationship between CO and N_2O, and an inverse one between NO_x and N_2O.

The raising concerns on greenhouse gases emissions require then some more detailed investigation and evaluations of all sources of such compound. The paper reports the major outcomes of an experimental evaluation carried out in a state-of-the-art waste incineration plant which was recently upgraded in the flue gas treatment system; the improvements include the substitution of lime with sodium bicarbonate for acid gases abatement, new fabrics in the bag filter, the replacement of the high-temperature urea-fed SNCR system for NO_x control with a low-temperature SCR process fed with ammonia. The temperature profile of the flue gas treating system was adapted accordingly, with higher temperature in the bag filter compared to the previous layout.

Role of SNCR and SCR systems with respect to N_2O formation

SNCR process for NO_x abatement is considered as the indirect major source of N_2O emissions from waste incineration. The conversion rate depends on the reduction agent: when ammonia is utilised, up to 15% of removed NO_x can be converted to N_2O, while with urea this can increase up to 30%. In terms of N_2O stack concentration, this means a range between 20 and 60 mg/m^3_n, with higher levels for those situations where a significant performance in NO_x removal is required (European Commission, 2006). If the systems is properly optimised, conversion rates with ammonia can be easily reduced to below 2%, while with urea this can be hardly reduced below 10%.

When the temperature in the section where the reactant is introduced falls below 850 – 900°C, the denitrification kinetic is significantly lowered and ammonia slips are released, together with the formation of N_2O. At the standard operating temperatures of modern combustors (above 950 – 1000°C) thermal destruction of N_2O occurs, favoured by higher temperatures and higher flue gas retention times at such temperature levels.

The formation of N_2O in SCR processes is related to the typology and age of the catalyst, to its operating temperature and to the flue gas composition. At low temperatures and with a new and clean catalyst, the NO_x to N_2O conversion rate is lower than 5%; nevertheless it never increases over 8%, even for old and dirty reactors. State-of-the art plants are generally operated with conversion rate below 1 – 2%. Better performances are obtained with ternary catalysts, with TiO_2 as

support, V_2O_5 as active component and WO_3 as promoter. According to Yates et al. (2005) and Martin et al. (2006), higher emissions of N_2O are observed for increasing percentage of vanadium.

The operating temperature plays a major role, with lower N_2O conversion rate for lower temperatures; on the other side, it is well known that for temperature lower than 200°C there is an increasing risk of ammonium bisulphate deposition and consequent decreasing of the catalyst efficiency, in the case of a flue gas still containing significant amount of SO_2. Finally, Goo et al. (2006) have also observed a role of SO_2 in inhibiting N_2O formation for T < 200°C.

NO_x removal with "hybrid" technology

Another option for NO_X removal is the so-called "hybrid" system, where both SNCR and SCR are in place. The reducing reactant (ammonia or urea) is only fed in the combustion chamber (SNCR-like) and the tail end catalyst relies on the slip of ammonia deriving from the SNCR. This allows to operate the SNCR system at a higher efficiency by increasing the reactant feeding rate, as the ammonia slip becomes the reducing agent for the catalyst. This option, proposed by Albanese et al. (2005), has been recently selected by some plant operators who had to face new NO_x emission limits which forced them to shift from SNCR to SCR. Despite the plant subject to the present investigation is not based on a hybrid system, it was also possible to evaluate its performances under such condition which happened due to a failure of the urea hydrolysing system (as better explained below).

MATERIALS AND METHODS

N_2O emissions have been characterised in the Milano-Silla 2 waste-to-energy (WTE) plant, a 3 lines mass burn moving grate combustor, with a treatment capacity of 1450 tons per day, which has been recently subjected to a complete renewal of the flue gas treatment line. The old configuration based on urea-fed SNCR and lime absorption (Fig. 1) was replaced by a low temperature tail-end SCR and sodium bicarbonate absorption. The higher operating temperature of sodium bicarbonate compared to lime (180-190°C vs. 130-140°C) has allowed to avoid flue gas reheating before entering the catalyst, whose operating temperature is around 180°C. It must be noted that, nevertheless, a backup natural gas burner is provided upstream the catalyst for the start-up operation and for possible situations where the temperature at the fabric filter exit falls below a certain set-point.

In order to exploit the existing urea storage and feeding system, and to avoid its conversion to the more problematic ammonia, the SCR system has been equipped with an hydrolyser for converting urea to ammonia prior to its introduction in the flue gas. Fig. 2 shows the current layout of the revamped Silla 2 plant. The reason for such an improvement was the request by the local authorities to comply with new stack emission targets for NO_x (50 mg/m_n^3) and HCl (2 mg/m_n^3). Such low values, considerably stricter than those set by the 2000/76/EU Directive on waste incineration, derive from the critical atmospheric situation of the Po valley and of the city of Milan in particular, where high levels of gaseous and fine particulates pollutants are frequently observed, the latter being mainly of secondary origin (Giugliano et al., 2005).

Both the new and the old layouts of the plant have been investigated, in order to assess N_2O emission levels and the role of different operating parameters. Data have been gathered from the Distributed Control System (DCS) of the plant, in terms of minute, hourly and daily average, according to the different evaluations performed. Concentrations of all relevant pollutants are measured at the stack and, for most of them, at boiler exit, too. The latter represent the raw gas concentrations, with the only exception of NO_x in the SNCR configuration, where their abatement takes place in the combustion chamber.

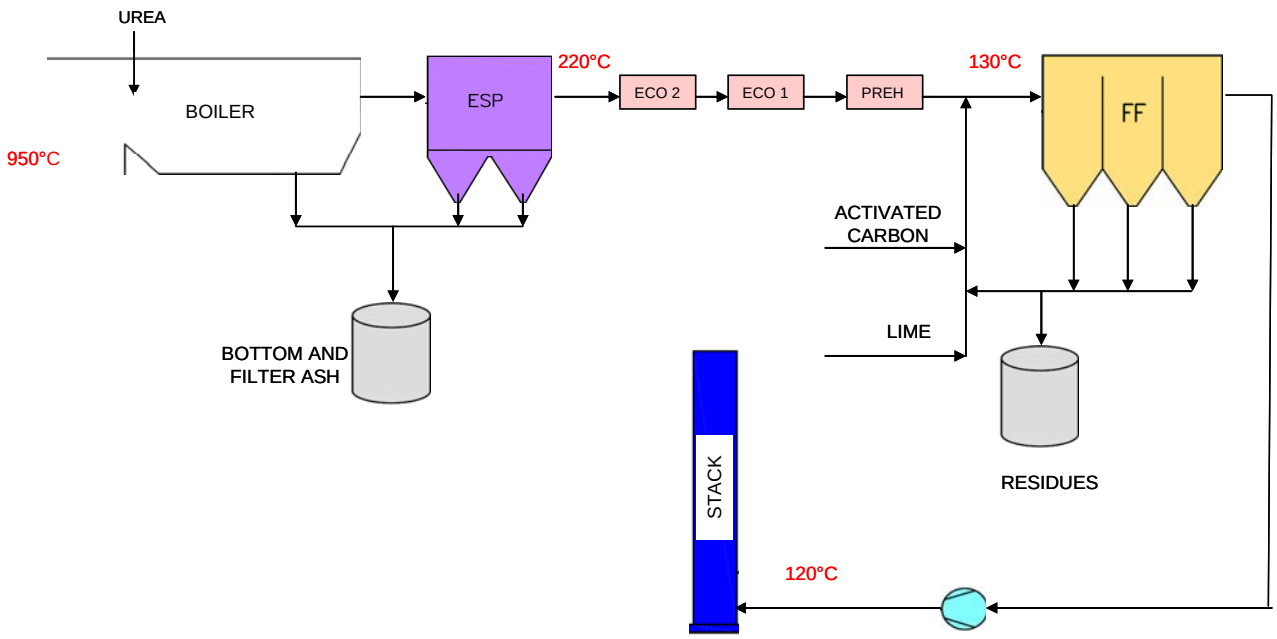

Figure 1 – Layout of the Silla 2 plant in its old configuration

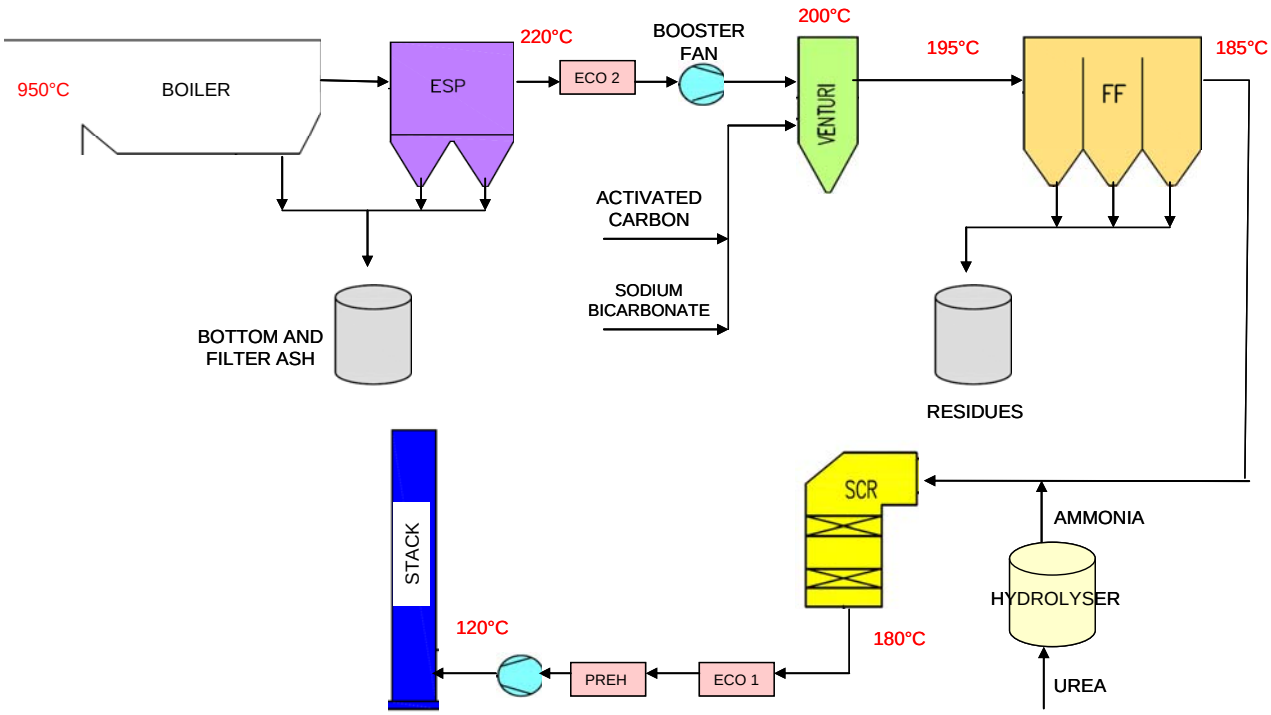

Figure 2 – Layout of the Silla 2 plant in its current configuration

RESULTS

Characterisation of N_2O emissions during SNCR operation

Tab. 1 reports the characterisation of N_2O daily average stack emissions from the three lines of Silla 2 plant in its old configuration. The average concentration varies between 15 and 20 mg/m^3_n, with peaks close to 30 mg/m^3_n and minimum values almost never lower than 10 mg/m^3_n.

Table 1 – Basic statistical characterisation of N_2O stack emissions (old configuration – SNCR + lime – daily average)

		Line 1	*Line 2*	*Line 3*
Average	*mg/m^3_n*	16,1	19,2	14,9
Standard deviation	*mg/m^3_n*	4,48	5,29	3,22
Maximum	*mg/m^3_n*	25,6	29,6	22,3
Minimum	*mg/m^3_n*	10,1	12,5	9,1
Range Max-min	*mg/m^3_n*	15,5	17,1	13,2
N° available data	-	115	113	116
Median	*mg/m^3_n*	14,4	16,4	14,3
1° quartile	*mg/m^3_n*	12,2	14,5	12,2
3° quartile	*mg/m^3_n*	20,1	20,0	20,3
Interquartile range	*mg/m^3_n*	7,88	5,51	8,06

After a first screening based on the analysis of hourly average data, 6 major parameters have been considered in order to assess their possible influence on N_2O emissions:

- post-combustion temperature
- NO_x concentration at boiler exit
- oxygen concentration at boiler exit
- CO concentration at boiler exit
- ammonia concentration at boiler exit
- urea feeding rate

Data have been analysed by selecting different operating periods where a single parameter showed an appreciable variation, while the remaining five remained stable. Results are reported in Fig. 3.

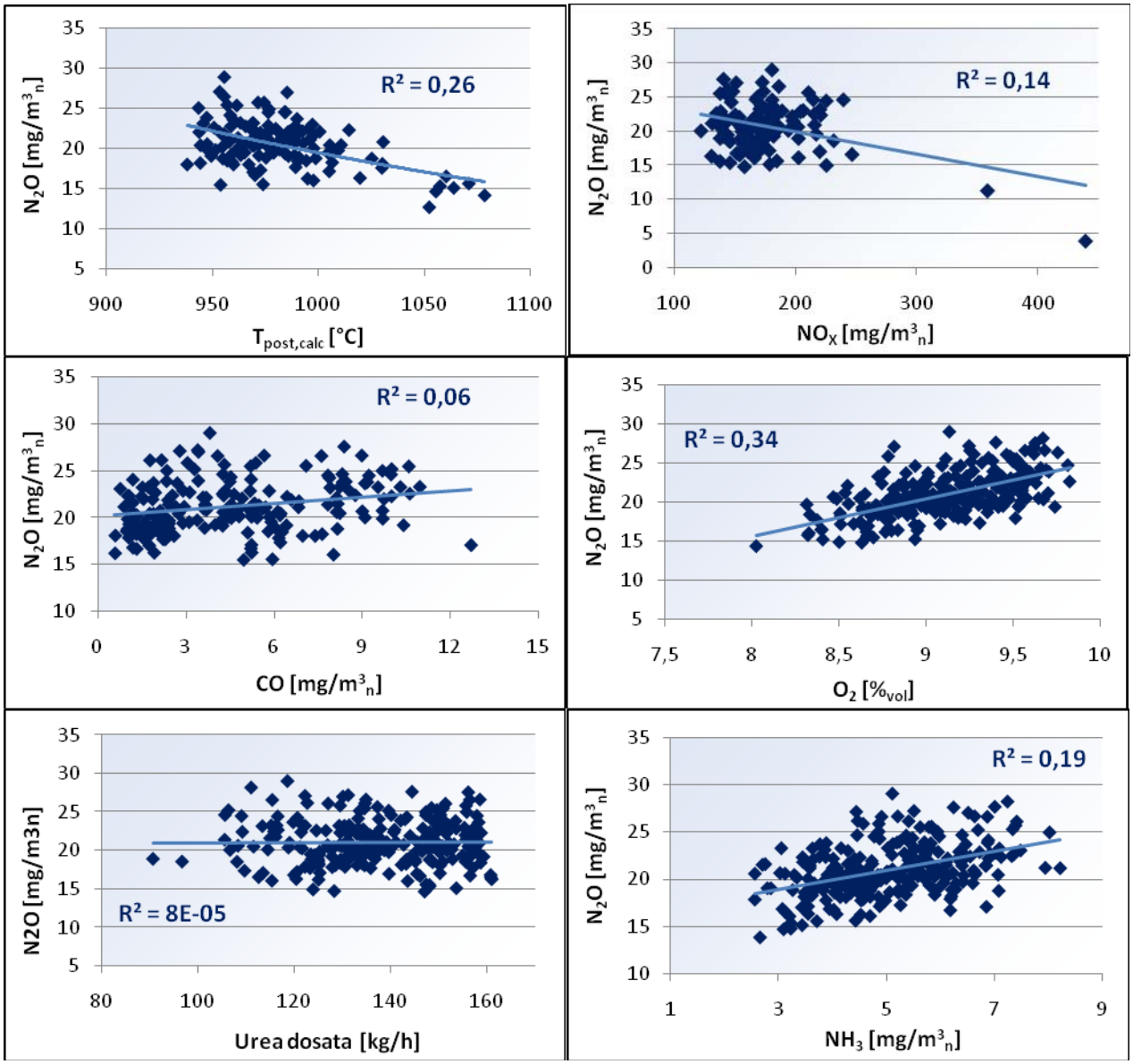

Figure 3 – Relationship between major operating parameters and N_2O stack concentration (old configuration – SNCR + lime – hourly average)

Despite a general poor level of correlation between N_2O emissions and the different operating parameters, one can observe that N_2O concentration at the stack decreases with increasing post-combustion temperature (especially above 1010°C). This might be related to the less favourable condition for its formation, coupled with a possible destruction of previously formed N_2O (in cooler sections of the kiln).

Higher N_2O levels are observed for lower NO_x concentrations, while the influence of carbon monoxide looks negligible. The highest positive correlation is observed with oxygen concentration at boiler exit, and a similar one, but less pronounced, with ammonia slip at the stack. Surprisingly the urea feeding rate does not affect N_2O concentration at the stack.

The major conclusion is that, for the plant investigated, the post-combustion temperature should be kept in the range 1010 – 1050°C, in order to minimise the stack concentration of all nitrogen compounds (ammonia, NO_x, N_2O).

Characterisation of N_2O emissions during SCR operation

Similar evaluations were conducted for the new configuration of the flue gas treatment section (sodium bicarbonate + SCR). Table 1 clearly shows that N_2O emission levels had in this case a drastic decrease compared to the old ones (Tab. 1). The same approach adopted to search for

correlations between N_2O concentration and the different operating parameters that are likely to affect it in case of SCR systems resulted in the total absence of any correlation (Tab. 3). Stack concentrations are in fact very low and very stable, and not affected at all by the flue gas cleaning system. This is due to the very stable operating conditions of the catalytic reactor (in particular temperature must be kept within a very narrow variation range for ensuring optimal NO_x removal) and to its negligible selectivity towards N_2O formation, which has been estimated in the order of 0,3%.

Table 2 – Basic statistical characterisation of N_2O stack emissions (new configuration – sodium bicarbonate + SCR – daily average). Line 1 was not yet in stable operation and it has not been included in the analysis

		Line 2	*Line 3*
Average	*mg/m³n*	0,9	0,3
Standard deviation	*mg/m³n*	0,16	0,26
Maximum	*mg/m³n*	2,0	1,9
Minimum	*mg/m³n*	0,7	0,1
Range Max-min	*mg/m³n*	1,3	1,8
N° available data	-	103	65
Median	*mg/m³n*	0,9	0,26
1° quartile	*mg/m³n*	0,83	0,21
3° quartile	*mg/m³n*	1,01	0,32
Interquartile range	*mg/m³n*	0,18	0,12

Table 3 – Basic statistical analysis of the investigated parameters and their correlation coefficient (R^2) with N_2O stack concentration

	$NO_{X,raw\ gas}$	$NO_{X,reduced}$	$NH_{3,stack}$	$SO_{X,stack}$	H_2O_{stack}	T_{SCR_inlet}	*Urea feeding rate*	N_2O_{stack}
	mg/m³n	*mg/m³n*	*mg/m³n*	*mg/m³n*	*%*	*°C*	*kg/h*	*mg/m³n*
Average	329,4	280,5	2,1	1,6	15,6	184,5	56,7	1,0
Maximum	413,1	357,0	5,4	3,3	19,6	188,1	81,1	1,4
Minimum	236,8	187,1	1,2	0,2	8,9	180,2	7,2	0,5
Standard deviation	39,8	37,7	0,7	0,9	2,0	1,7	10,9	0,2
St. Dev. [%average]	12%	13%	33%	56%	13%	1%	19%	19%
R^2	0,040	0,017	0,004	0,13	0,003	0,016	0,018	-

Characterisation of N_2O emissions during "hybrid" operation

The "hybrid" functioning of the NO_x removal system was accidentally evaluated when the plant was operated in such a way for about a week, due to a malfunctioning of the hydrolyser of urea, that prevented its dosage upstream the catalyst. Urea was then introduced by using the post-combustion chamber feeders, while the catalyst could rely on the ammonia slip as a reducing agent. Tab. 4 summarises the major data collected during this period in comparison to the standard operation in the SNCR and SCR modes. The data show that the urea feeding rate had to be kept significantly higher than in SNCR operation, in order to have a sufficient ammonia slip for the catalyst to be effective in further NO_x removal. NO_x concentration at the stack was kept at about 50 mg/m_n^3, a good performance but worse than during the standard SCR mode (40 mg/m_n^3). On the other hand it is interesting to observe that N_2O stack concentration resulted absolutely similar to that registered during the standard SNCR mode, indicating that the catalyst has no effect on already existing N_2O, as reported also by other authors (Pottier, 2001; Van Den Brink, 2001). It is then clear that the very low N_2O levels measured during standard SCR operation are related to the prevention of its

formation rather than its destruction inside the catalyst.

Table 4 – Comparison between the "hybrid" functioning and SNCR and SCR standard operation

	Hybrid	SNCR + lime	bicarb + SCR
Flue gas flow rate [m^3_n/h]	130.370	131.900	130.900
NO_x raw gas [mg/m^3_n, as NO_2]	289	289	289
NO_x boiler exit [mg/m^3_n, as NO_2]	91,9	137,7	289
NO_x stack [mg/m^3_n, as NO_2]	53,9	137,7	39,6
NH_3 boiler exit [mg/m^3_n]	2,17	n.a.	0,72
NH_3 stack [mg/m^3_n]	0,56	4,8	0,71
N_2O stack [mg/m^3_n]	17,2	16,7	0,96
Urea feeding rate [kg/h]	198	145,2	57,1
NO_x removal efficiency (%)			
combustion chamber	68,2	52,4	-
catalyst	41,3	-	86,3
TOTAL	81,3	52,4	86,3

Overall assessment of the improvement of the flue gas treatment line

Despite a complete assessment of the plant revamping is out of the scope of this paper, it is interesting to mention its effects on other pollutants (Fig. 4) as well as on major operating parameters (Fig. 5). It can be observed that all monitored stack pollutants benefitted of the better performance of the new flue gas treatment line, the only exception being represented by total organic carbon (TOC) and mercury. This might due, especially for mercury, to the higher flue gas temperature at the activated carbon injection point and at the fabric filter (195 vs. 130°C, see Figs. 1 and 2), that might lead to a lower effectiveness of the adsorption process, typically enhanced by lower temperatures. Nevertheless in both cases measured values are well below emission limits, and included in the range 0,3 – 0,4 mg/m^3_n for TOC and 1 – 2 µg/m^3_n for mercury.

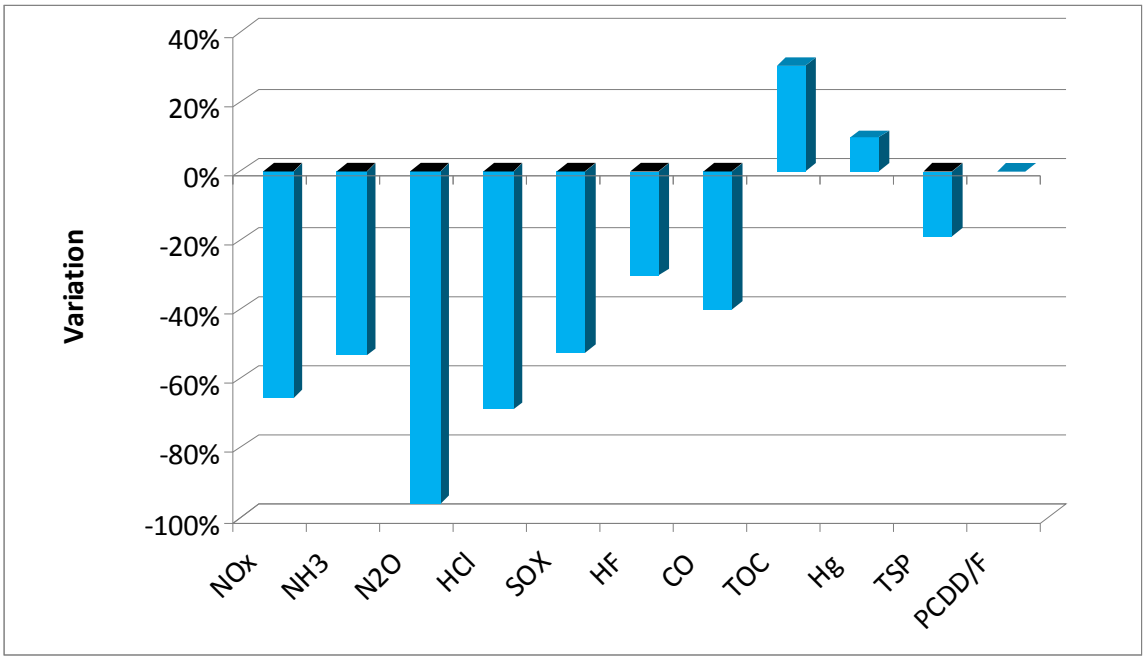

Figure 4 – Percentage variation of the average stack concentrations (new line vs. old one)

Reactants show a lower consumption in the new lines for both urea (that in the SCR system can be fed at lower, almost stoichiometric, levels) and sodium bicarbonate (fed with lower stoichiometric excess if compared with lime). Together with the lower production of fabric filter ashes, this compensates for the higher cost of sodium bicarbonate compared to lime, thus leading to a modest decrease (- 5%) of the flue gas treatment system operating costs.

For greenhouse gas emissions a major role in their overall decrease (- 4%) is played by the reduction of N_2O concentration at the stack and, for a minor extent, by the reduction of urea consumption. This compensates for the higher GHG emissions from sodium bicarbonate reactions in the flue gas, that lead to a modest release of CO_2 in comparison with lime that absorbs a certain amount of it, according to the following reactions, respectively:

For sodium bicarbonate:

$$2\ NaHCO_3 \rightarrow Na_2CO_3 + \underline{CO_2} + H_2O$$

$$Na_2CO_3 + 2\ HCl \rightarrow 2\ NaCl + \underline{CO_2} + H_2O$$

For lime:

$$Ca(OH)_2 + \underline{CO_2} \rightarrow CaCO_3 + H_2O$$

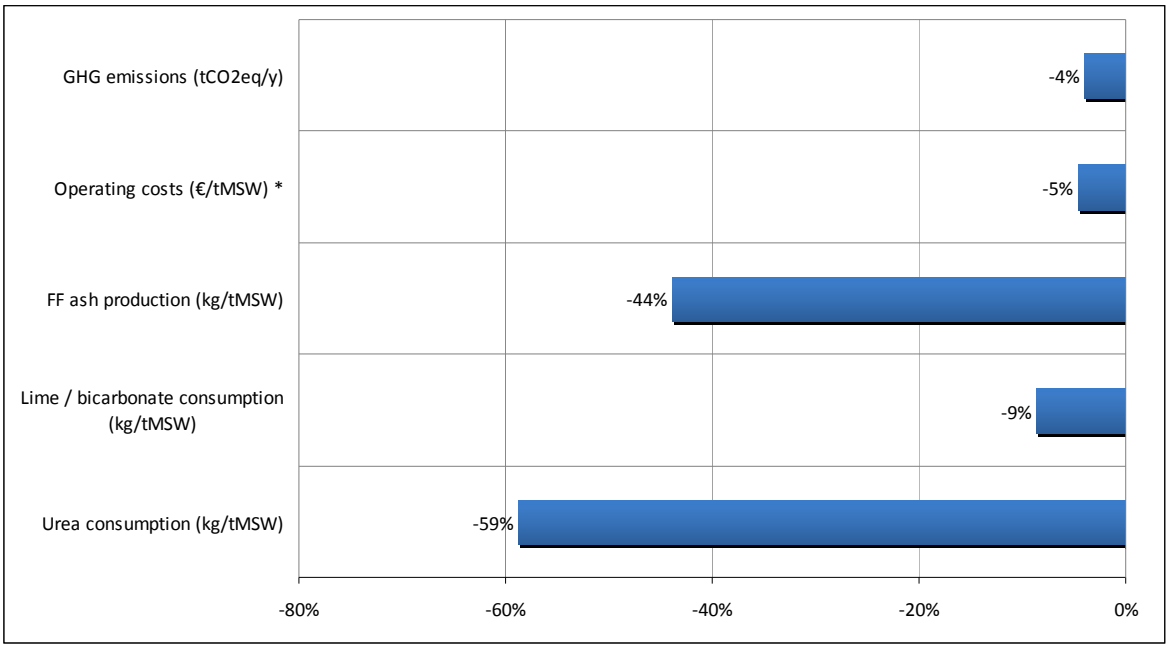

Figure 5 – Percentage variation of some major operating parameters (new line vs. old one)
*** costs related to flue gas treatment, only (reactants purchase + residues disposal)**

CONCLUSIONS

In the new configuration of the flue gas treatment line, impressive improvements in the emission of nitrogen compounds were observed, with N_2O concentration at the stack below 1 mg/m_n^3, NO_x below 50 mg/m_n^3 and NH_3 below 1 mg/m_n^3. The N_2O emission levels were so stable that it resulted almost impossible to find any correlation with other operational parameters. The possible role of the SCR system on the reduction of previously formed N_2O was excluded when analysing the "hybrid" operation of the plant (SNCR-like urea feeding in the post combustion chamber, with ammonia slip acting as the reducing agent in the SCR). In this configuration stack emissions of N_2O were equal to those registered with the old layout.

The analysis of the functioning of the new line was extended to other pollutants as well as to other operational aspects (consumption of reactants, production of residues, costs, overall greenhouse gases reduction). The picture shows a wide range of advantages, almost no drawbacks and an acceptable cost for the whole revamping operation.

ACKNOWLEDGEMENTS

The support of AMSA (Azienda Municipalizzata Servizi Ambientali), who provided the major operating parameters of the Silla 2 plant, is gratefully acknowledged.

REFERENCES

Albanese V., Boyle J., Sun W., Abrams R. (2005). “Hybridization of Urea-SNCR with SCR. A fit for the future”. ICAC’s Clean Air Technologies & Strategies Conference; 7-10 Marzo 2005, Baltimore, MD.

European Commission (2006). "Reference document on Best Available Techniques for Waste Incineration". BRef on Waste Incineration, August 2006.

Giugliano M., Lonati G., Butelli P., Romele L., Tardivo R., Grosso M. (2005). “Fine particulate (PM2.5–PM1) at urban sites with different traffic exposure”. Atmospheric Environment 39, 2421–2431

Goo H. J., Irfan M. F., Kim S. D., Hong S. C. (2006) "Effects of NO2 and SO2 on selective catalytic reduction of nitrogen oxides by ammonia". Chemosphere 67 (2007) 718-723.

Martìn J.A., Yates M.M., Àvila P., Suàrez S., Blanco J. (2006) "Nitrous oxide formation in low temperature selective catalityc reduction of nitrogen oxides with V_2O_5/TiO_2 Catalysts". Applied Catalysis B: Environmental 70 (2007) 330-334.

Olofson G., Wang W., Ye Z., Bjerle I., Anderson A. “Repressing NO_X and N_2O Emissions in a Fluidized Bed Biomass Combustor”. Energy Fuels 16, 915 (2002).

Pottier M. (2001). “Techniques de réduction des émissions de N_2O des ateliers d’acide nitrique”. Conférence internationale NO_x conf., 21 – 22/03/2001.

Svoboda K., Baxter D., Martinec J. (2006) "Nitrous oxide emissions from waste incineration". Institute of Chemistry, Slovak Academy of Sciences, Chemical Paper (2006)

Tanikawa N., Imai T., Urano K. (1995) "Characteristics of continuous analyzers for nitrous oxide in flue gases from municipal incinerators". The Science of the Total Environment 175 (1995) 189-198.

Van Den Brink R. (2001). “Traitement catalytique combiné du N_2O et des NO_x dans les gaz de queue d’un atelier d’acide nitrique”. Conférence internationale NO_x conf., 21 – 22/03/2001.

Yates M., Martìn J. A., Martìn - Luengo M. A., Suàrez S., Blanco J. (2005) "N_2O formation in the ammonia oxidation and in the SCR process with V_2O_5 - WO_3 catalysts". Catalysis Today 107-108 (2005) 120-125.